Art.-Number: 701969

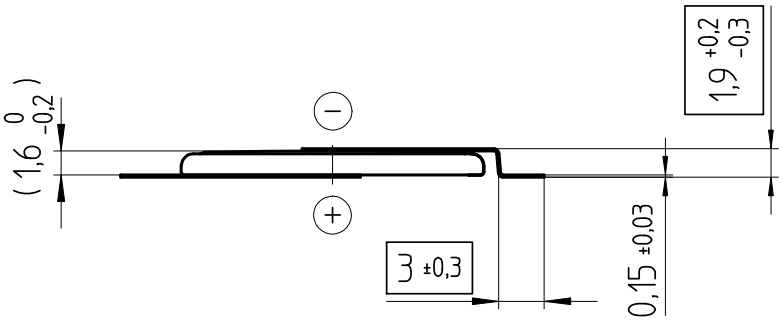

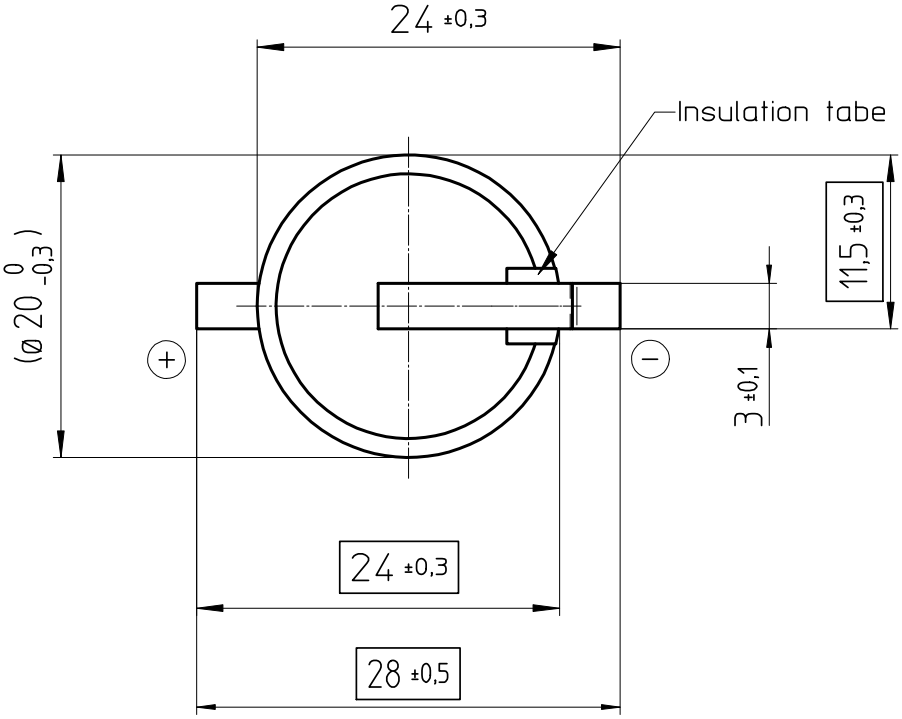

Tab material: Isotan (54%Cu,44%Ni,Mn)

All framed values will be used for dimension checking !

The Products of Renata SA are neither designed nor authorized for use in certain areas of appliction of environment.
For further details we refer to our webpage: www.renata.com/downloads/restriction_of_use

- Samples can deviate in the execution from the serie.

- Dimensions and tolerances can be specified only after the testing of the devices for the mass production definitely

Rev.	1	19.02.16	PWu	Rev.	⊙	.	.
Rev.	2	16.09.19	SRi	Rev.	⊙	.	.
Rev.	⊙	.	.	Rev.	⊙	.	.

Customer's Approval		
Date		
Signature		

Titel:

CR2016 MFR SM

Scale	Drawn	13.11.07	SRi
2:1	Checked	16.09.19	HSn
	Approved	16.09.19	MDi

renata batteries

CH-4452 Itingen
Switzerland

3.9208.4-2